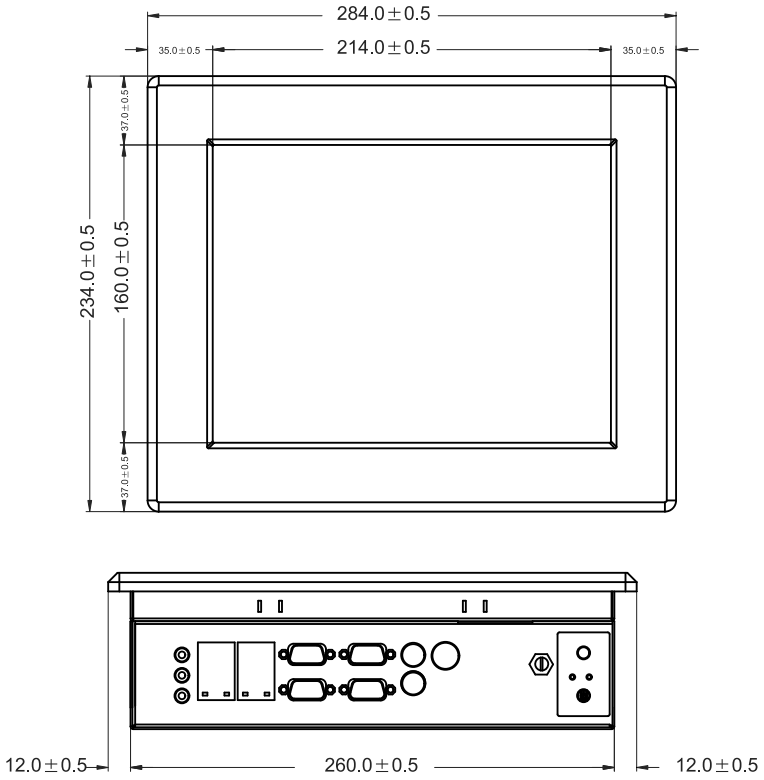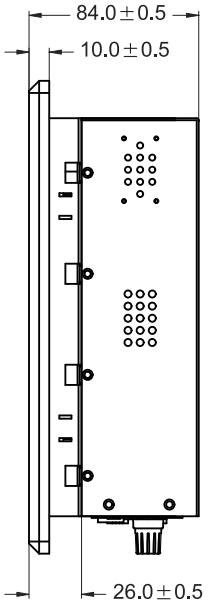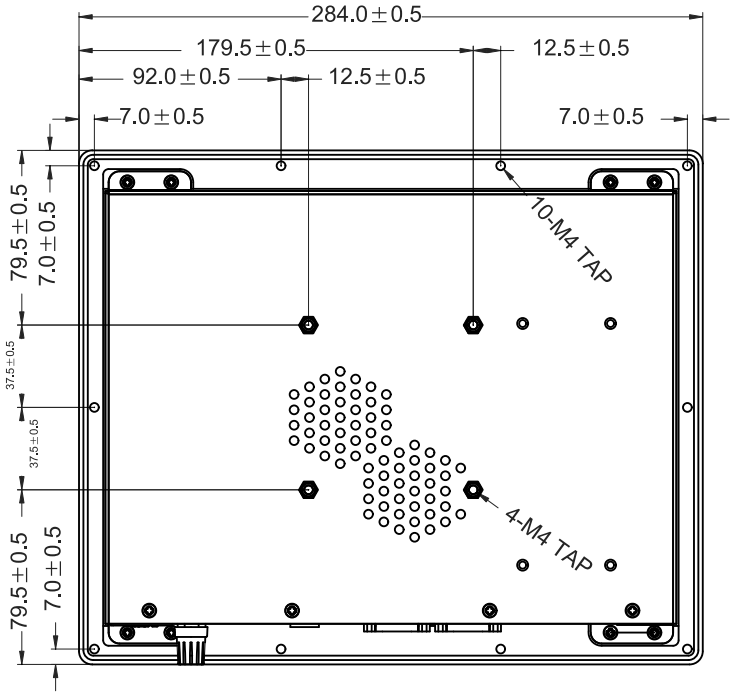SlimLine 10-AT Panelmount