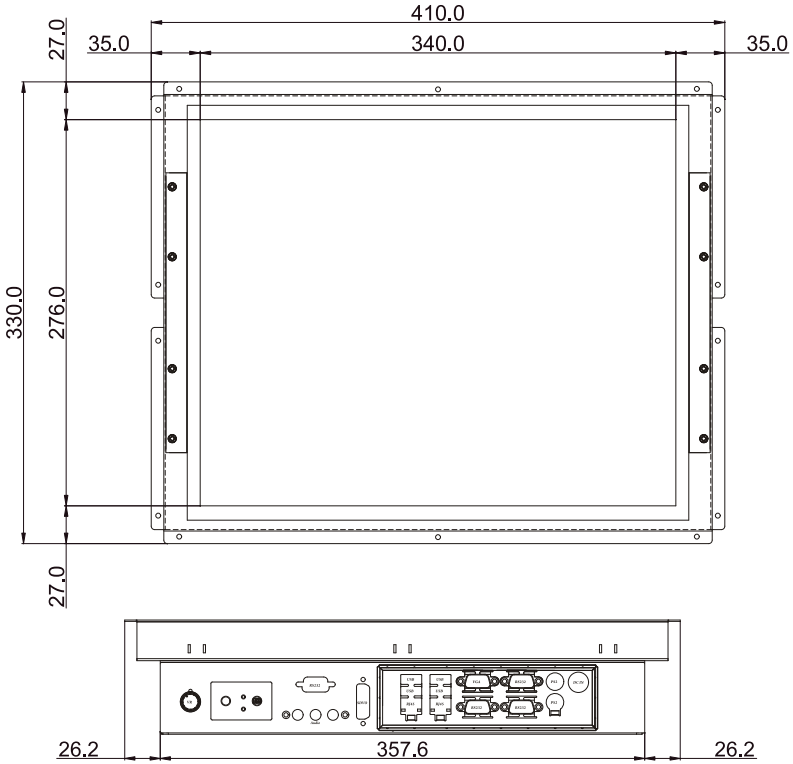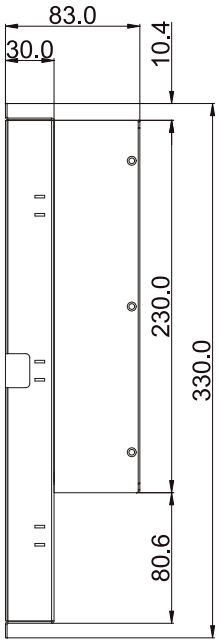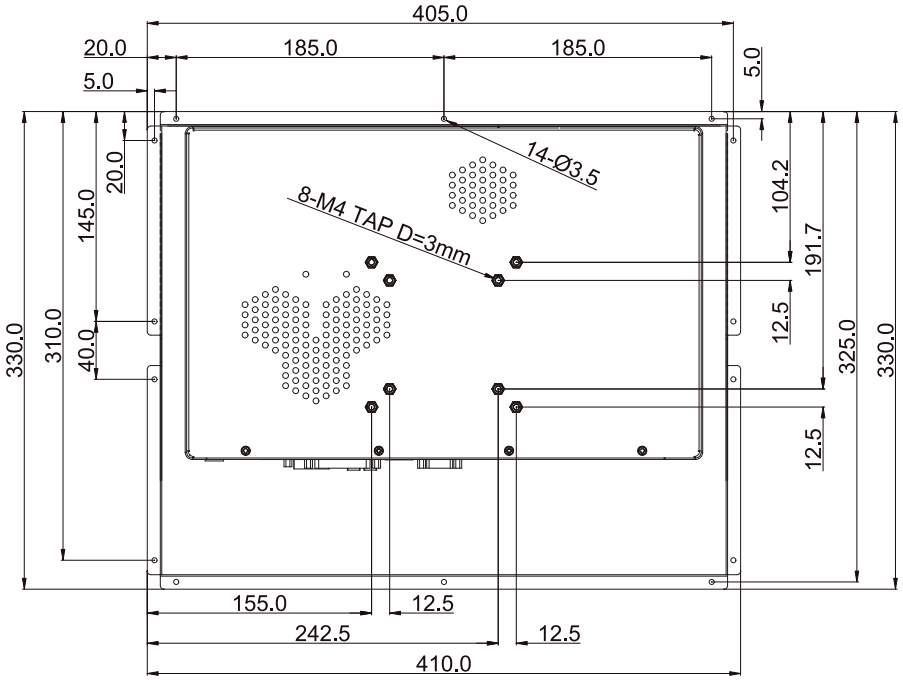SlimLine 17-AT Openframe