SlimLine 1082 Series

SlimLine PT 17-1092-OF (Openframe)

43,2 cm (17") 4:3 LCD

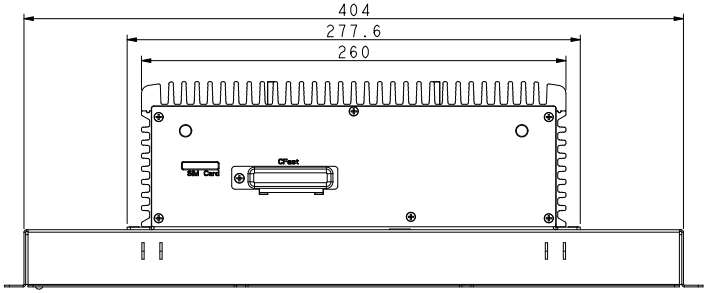

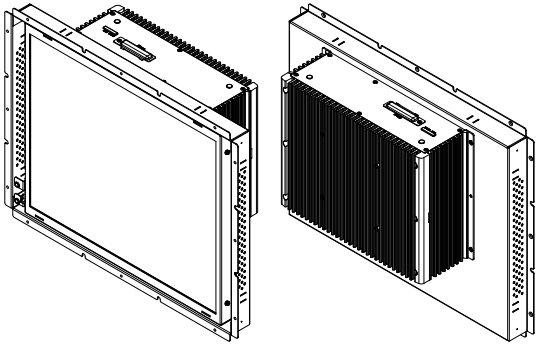

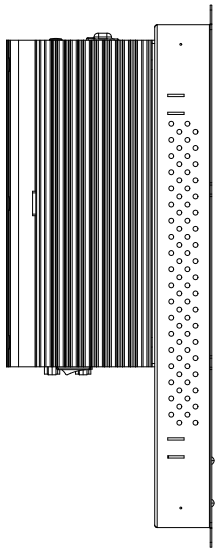

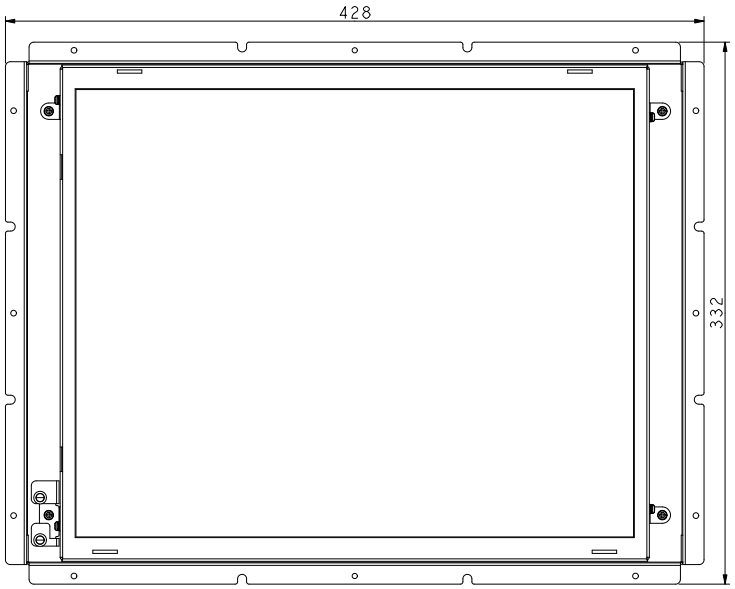

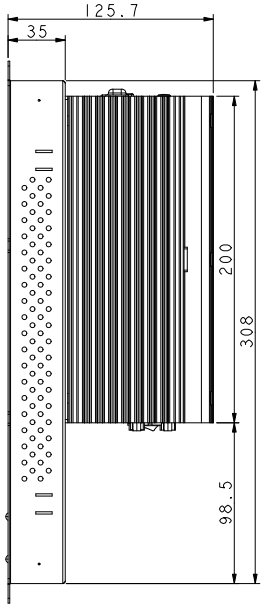

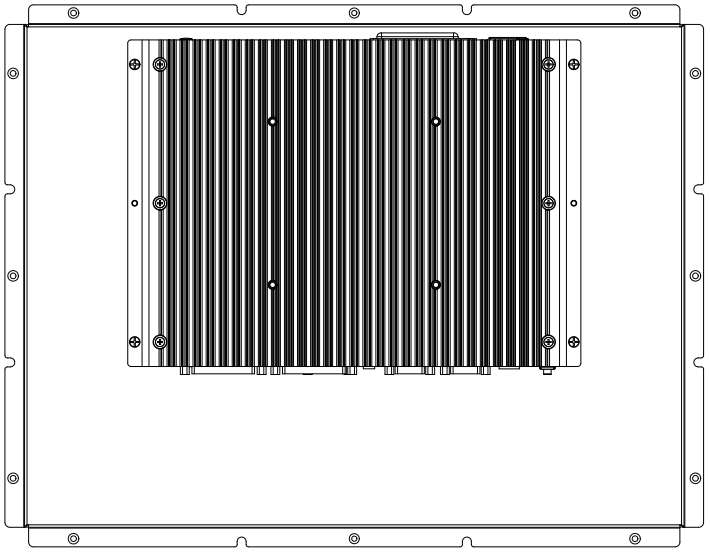

Unit: mm, not to scale. Errors and changes excepted. Version 250522