L140AD Rugged Laptop

Dimensions: 340 × 230 × 38 mm
13,3" (33,7 cm) 16:9
Net weight: 2,5 kg

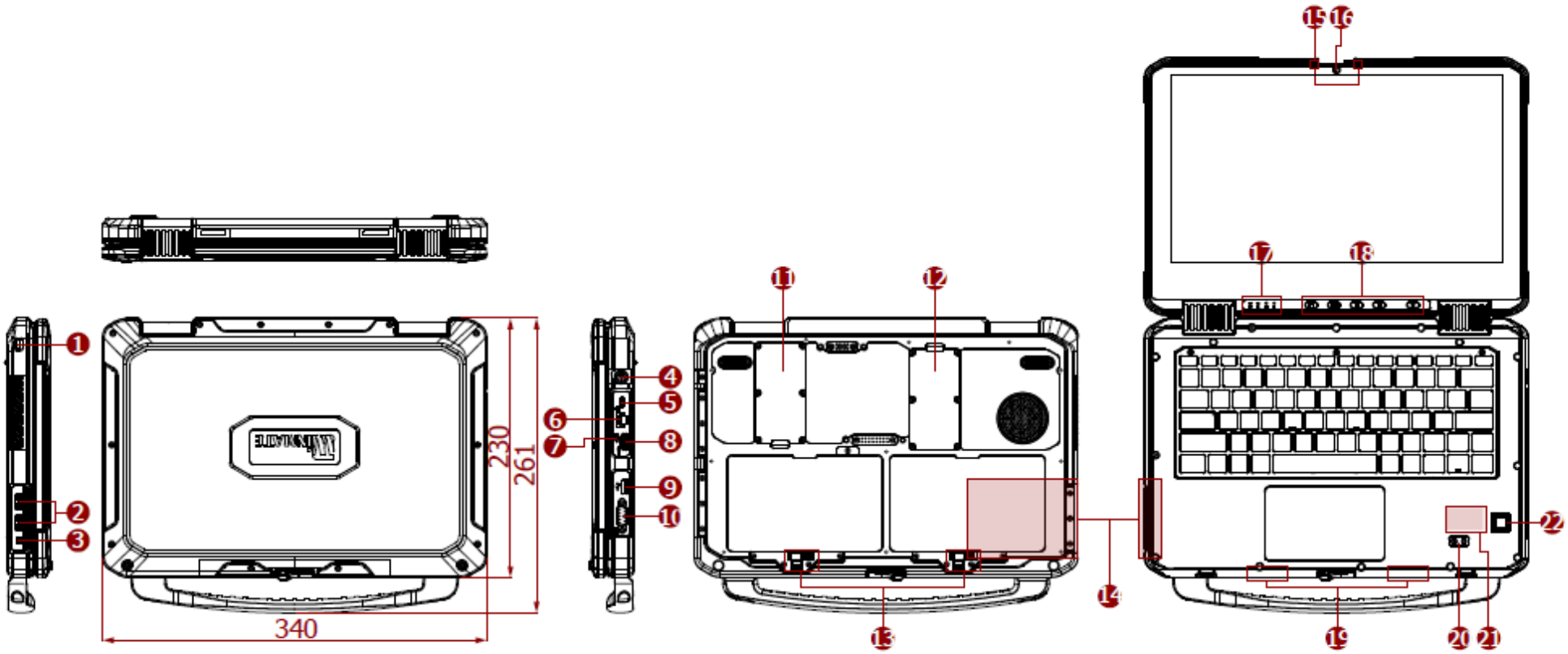

1. Kensington Lock
2. USBType-A
3. Audio
4. Power Input
5. USBType-C
6. GigaLAN
7. Reset
8. HDMI
9. USBType-A
10. COM
11. 2nd M.2 NVMe SSD
12. DDR5 RAM
13. Battery Lock
14. Smart Card Reader
15. Dual Digital Mic
16. 2MP Webcam
17. LED Indicators
18. Function Buttons
19. Speakers
20. 8MP Camera (Optional)
21. HF RFID (Optional)
22. Fingerprint Scanner (Optional)

Unit: mm, not to scale. Errors and changes excepted. Version 05032024